Rozmery v mm
Maße in mm
Dimensions in mm

H3LE RAM15

4,5kg

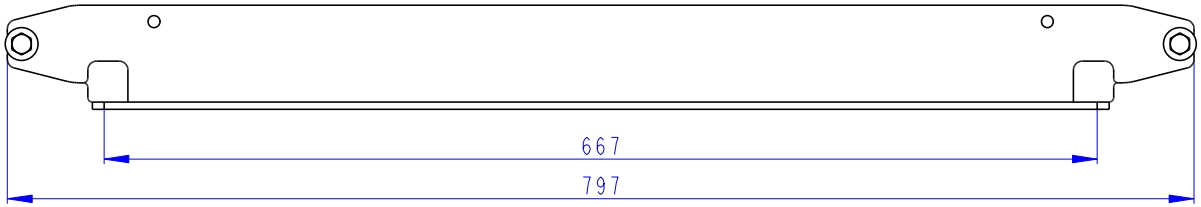

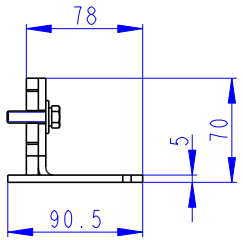

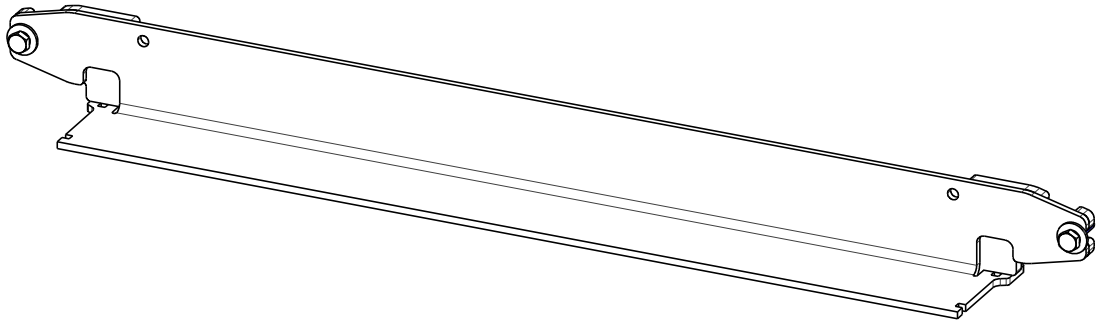

Rozmery v mm
Maße in mm
Dimensions in mm

H3LE RAM15
+H3LE RAM11

7kg

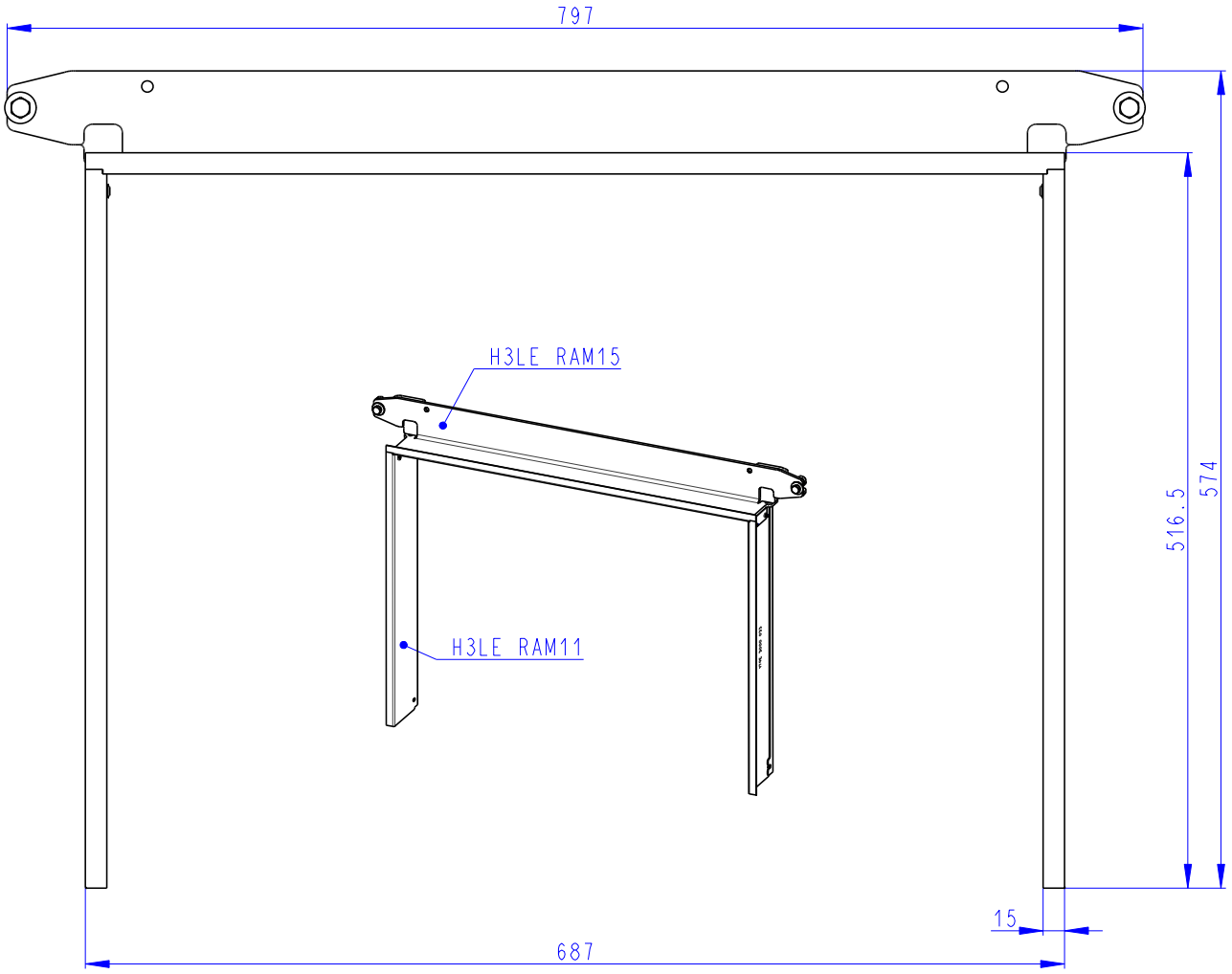

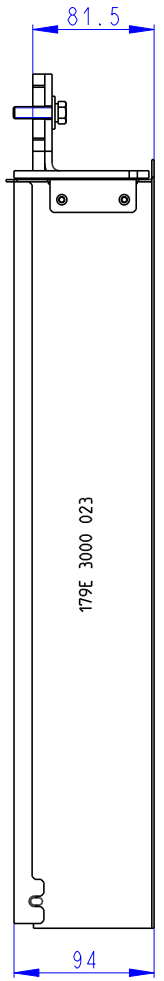

Rozmery v mm
Maße in mm
Dimensions in mm

H3LE RAM15
+H3LE RAM12

8kg

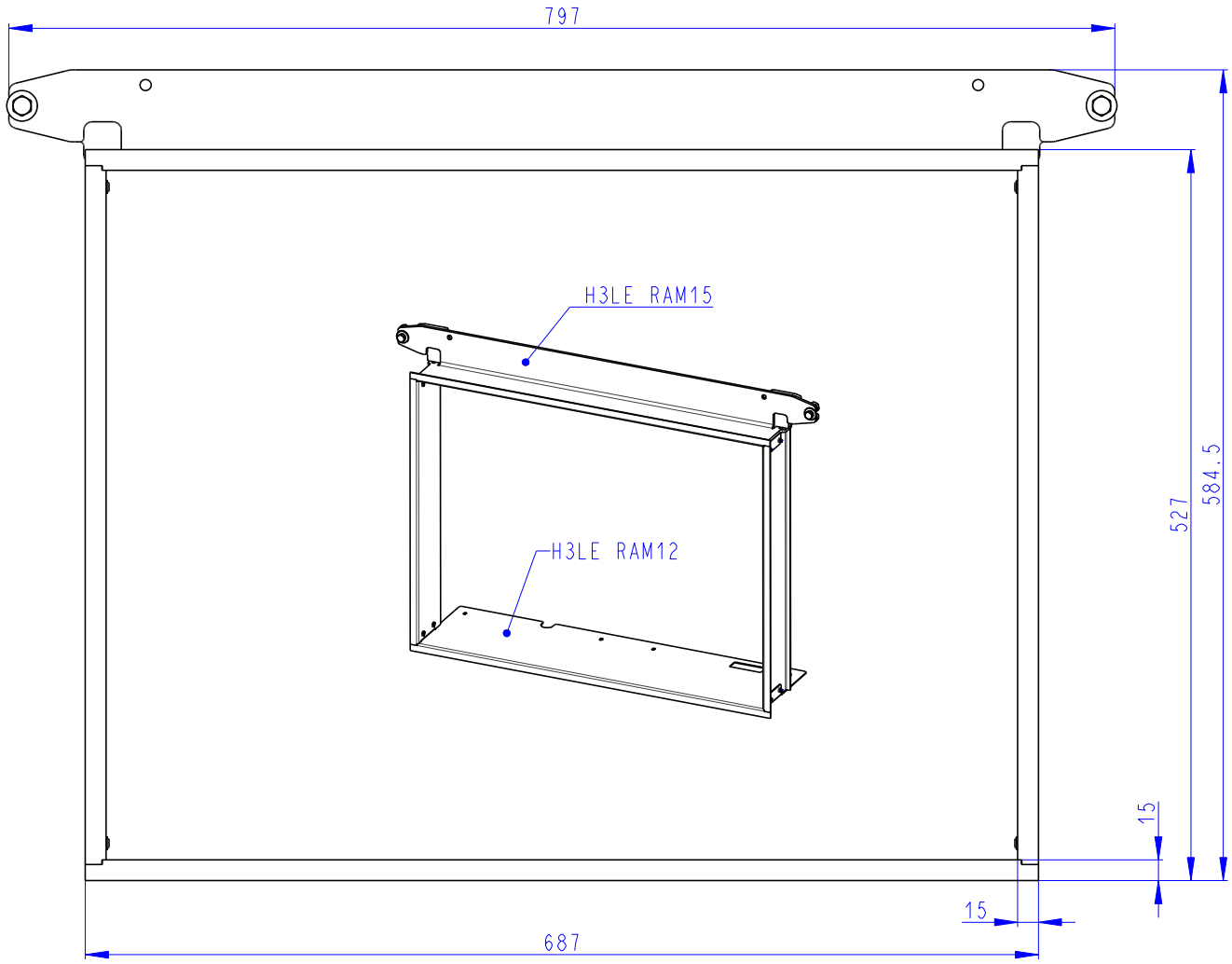

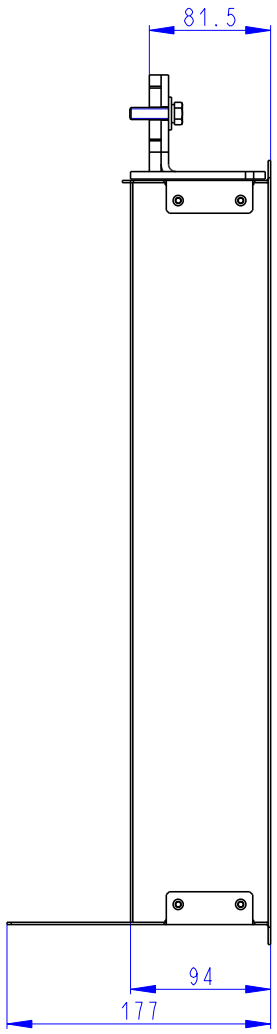

Rozmery v mm
Maße in mm
Dimensions in mm

H3LE RAM15
+H3LE RAM13

8,5kg

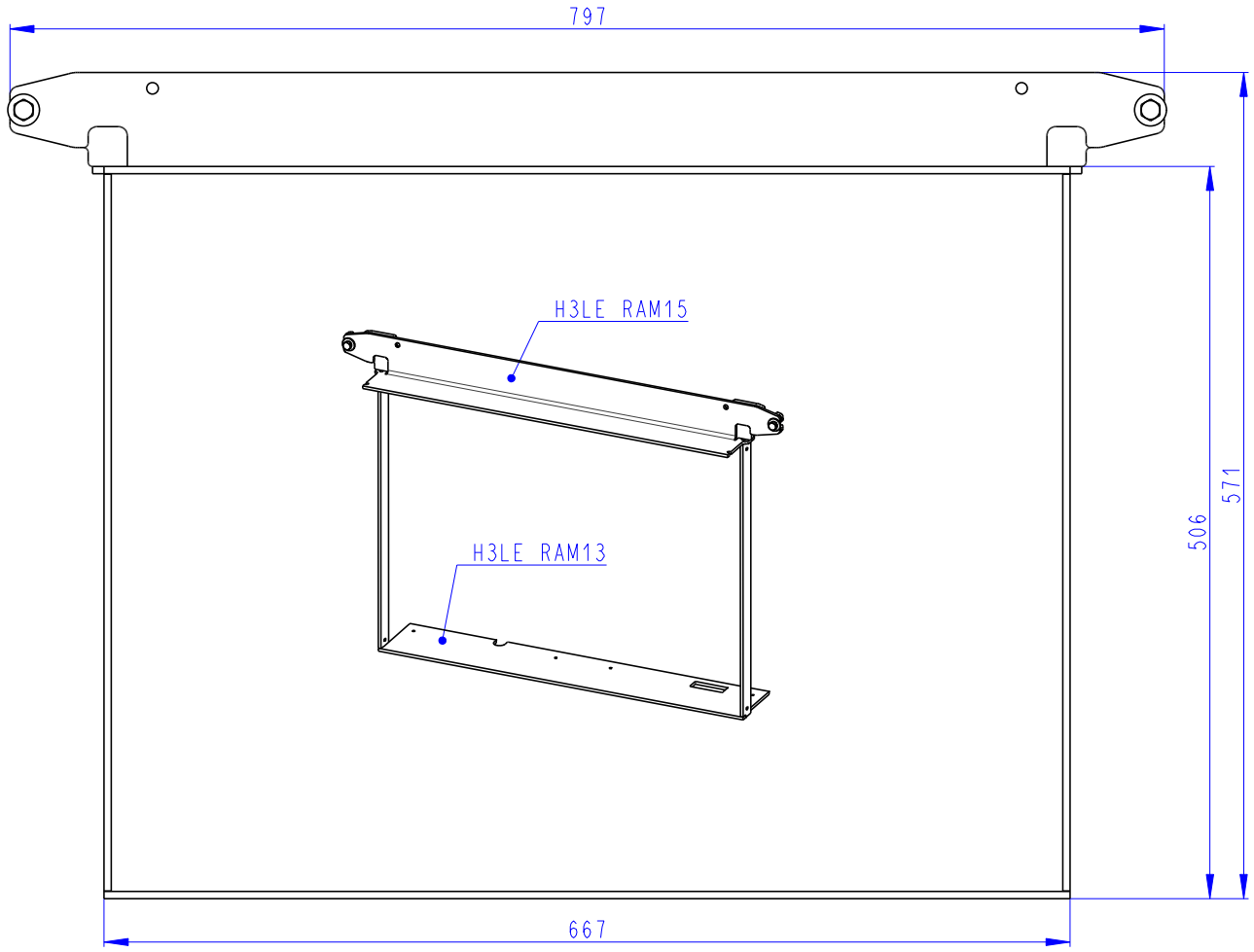

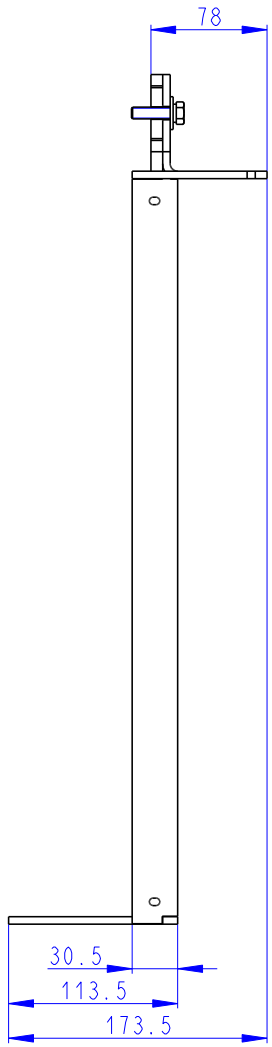

Rozmery v mm
Maße in mm
Dimensions in mm

H3LE RAM15
+H3LE RAM14

12,5kg

