Rozmery v mm
Maße in mm
Dimensions in mm

H3LF RAM15

6kg

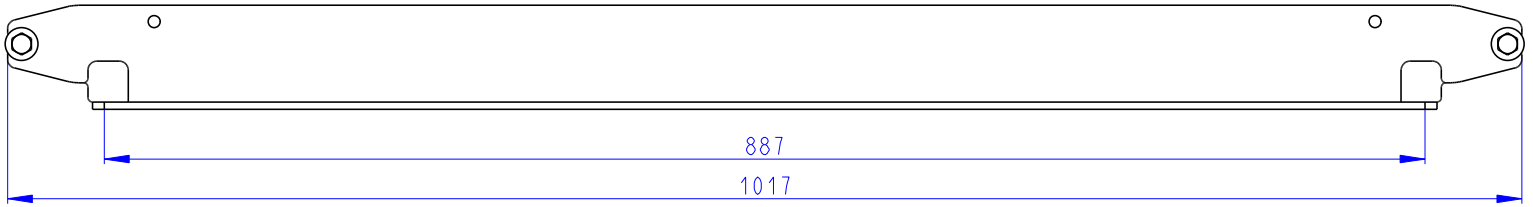

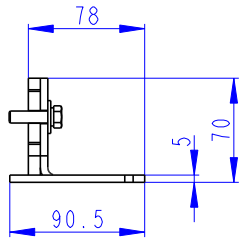

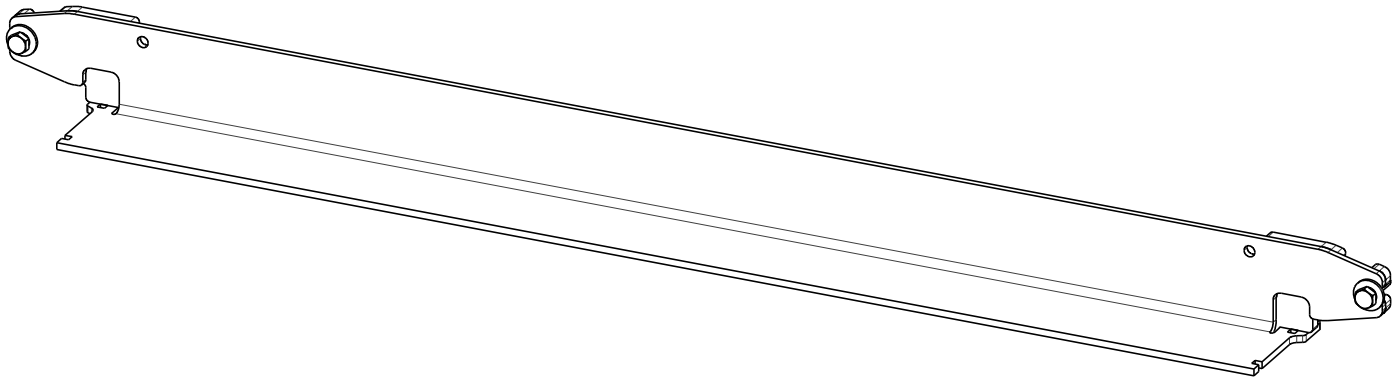

Rozmery v mm
Maße in mm
Dimensions in mm

H3LF RAM15
+H3LF RAM11

8kg

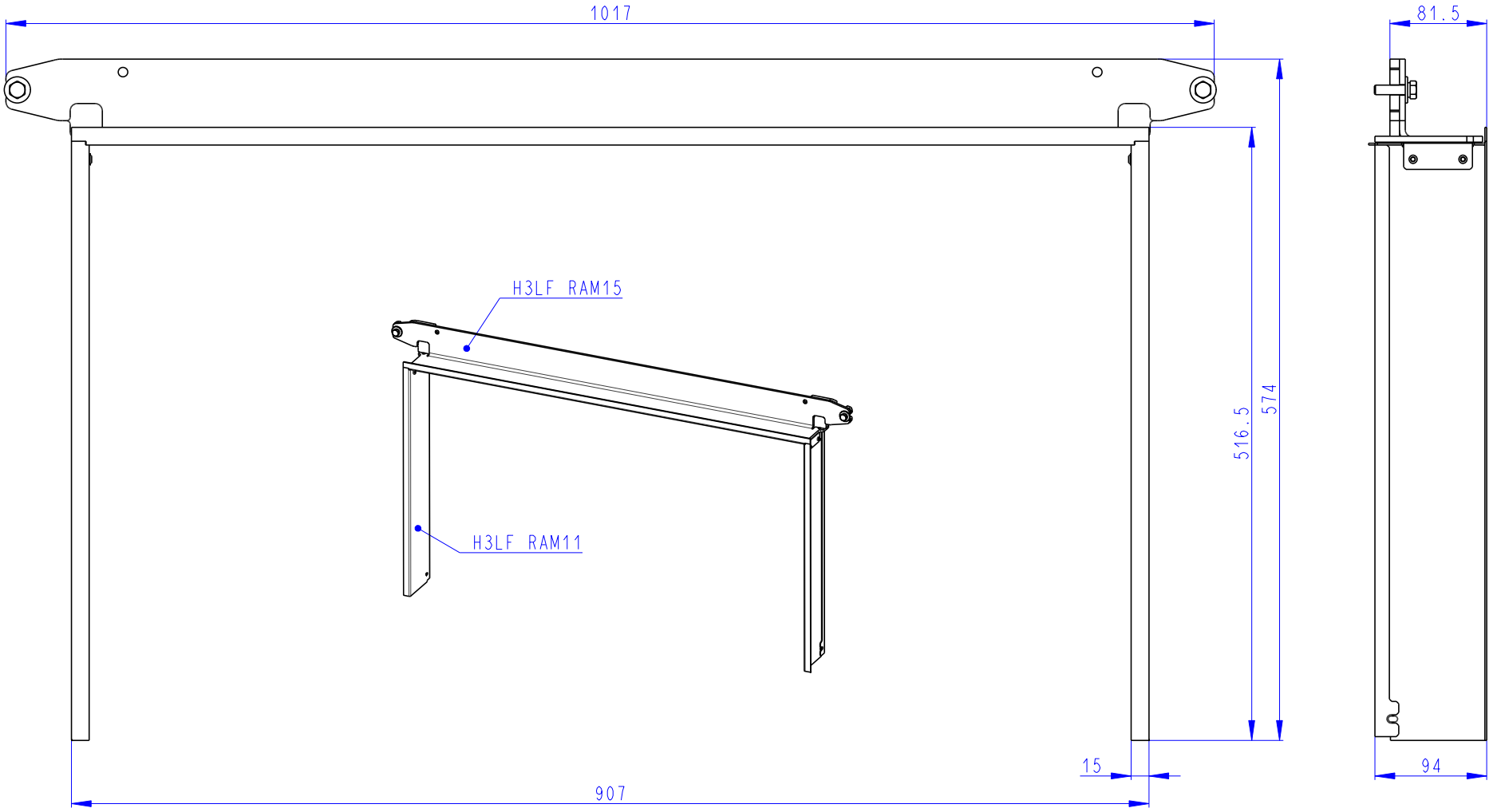

Rozmery v mm
Maße in mm
Dimensions in mm

H3LF RAM15
+H3LF RAM12

10kg

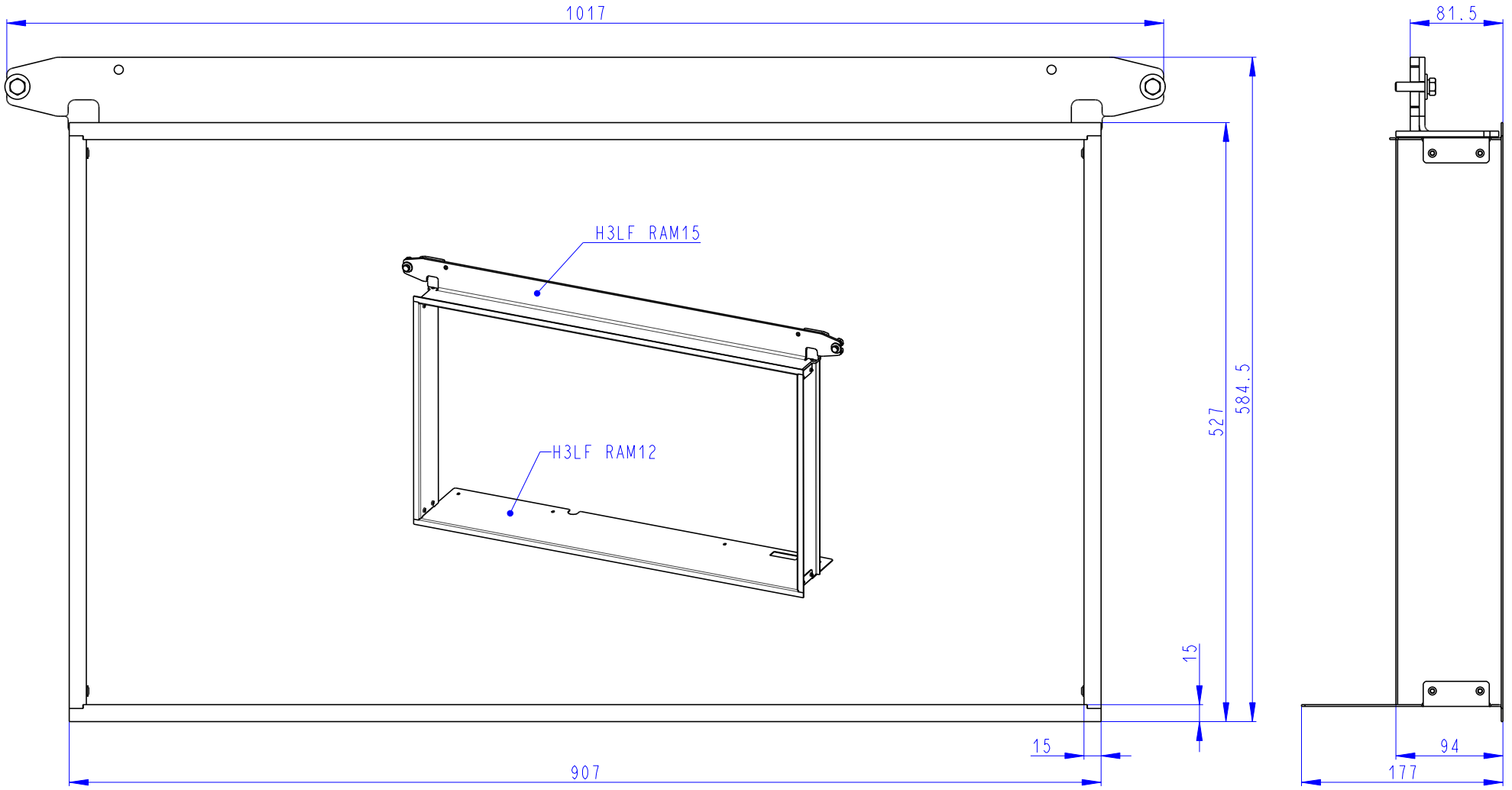

Rozmery v mm
Maße in mm
Dimensions in mm

H3LF RAM15
+H3LF RAM13

11kg

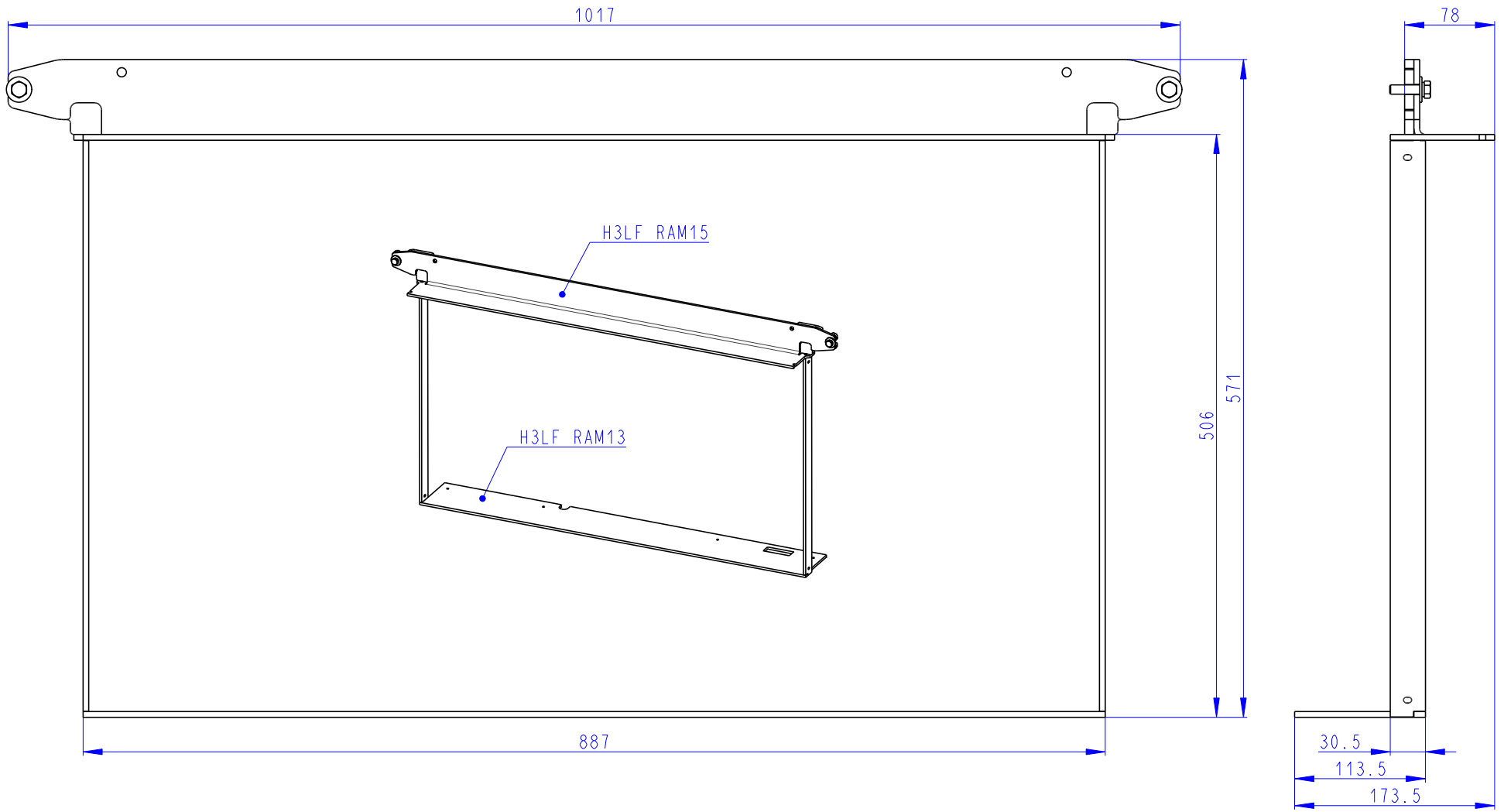

Rozmery v mm
Maße in mm
Dimensions in mm

H3LF RAM15
+H3LF RAM14

15kg

