Rozmery v mm
Maße in mm
Dimensions in mm

H3LG RAM15

7kg

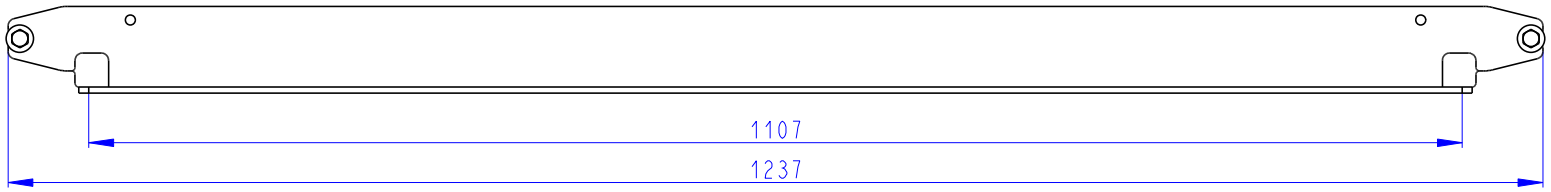

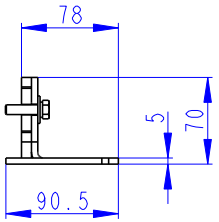

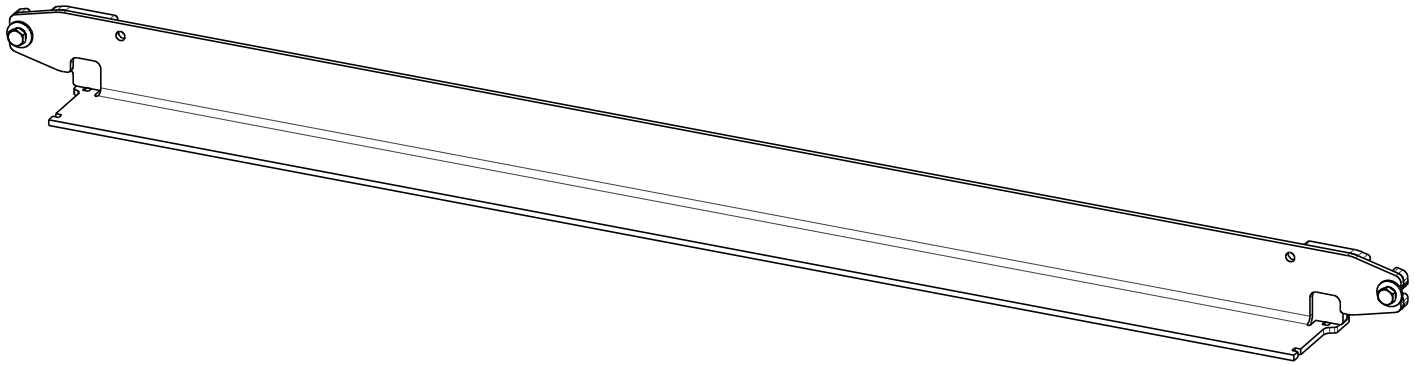

Rozmery v mm
Maße in mm
Dimensions in mm

H3LG RAM15
+H3LG RAM11

10kg

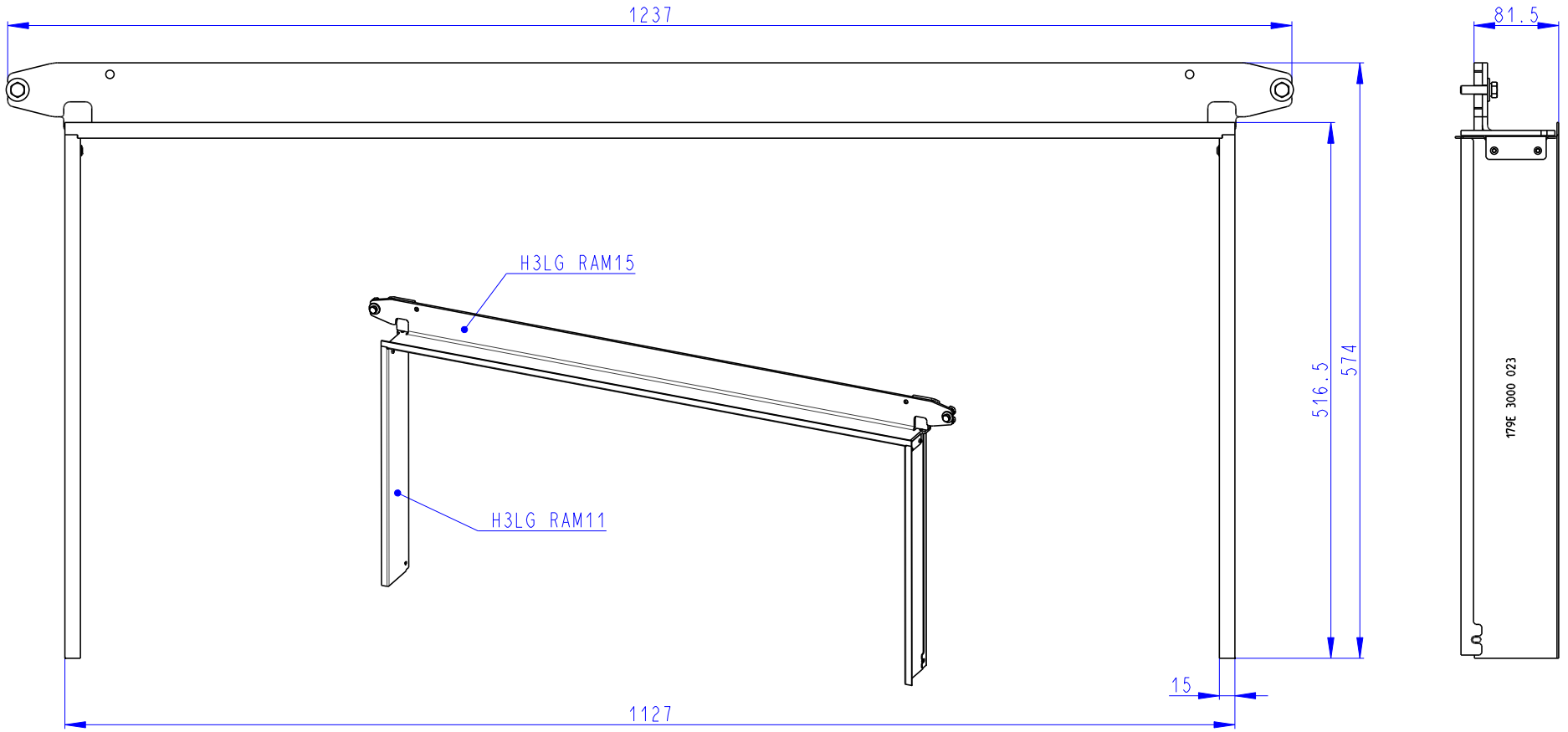

Rozmery v mm
Maße in mm
Dimensions in mm

H3LG RAM15
+H3LG RAM12

12kg

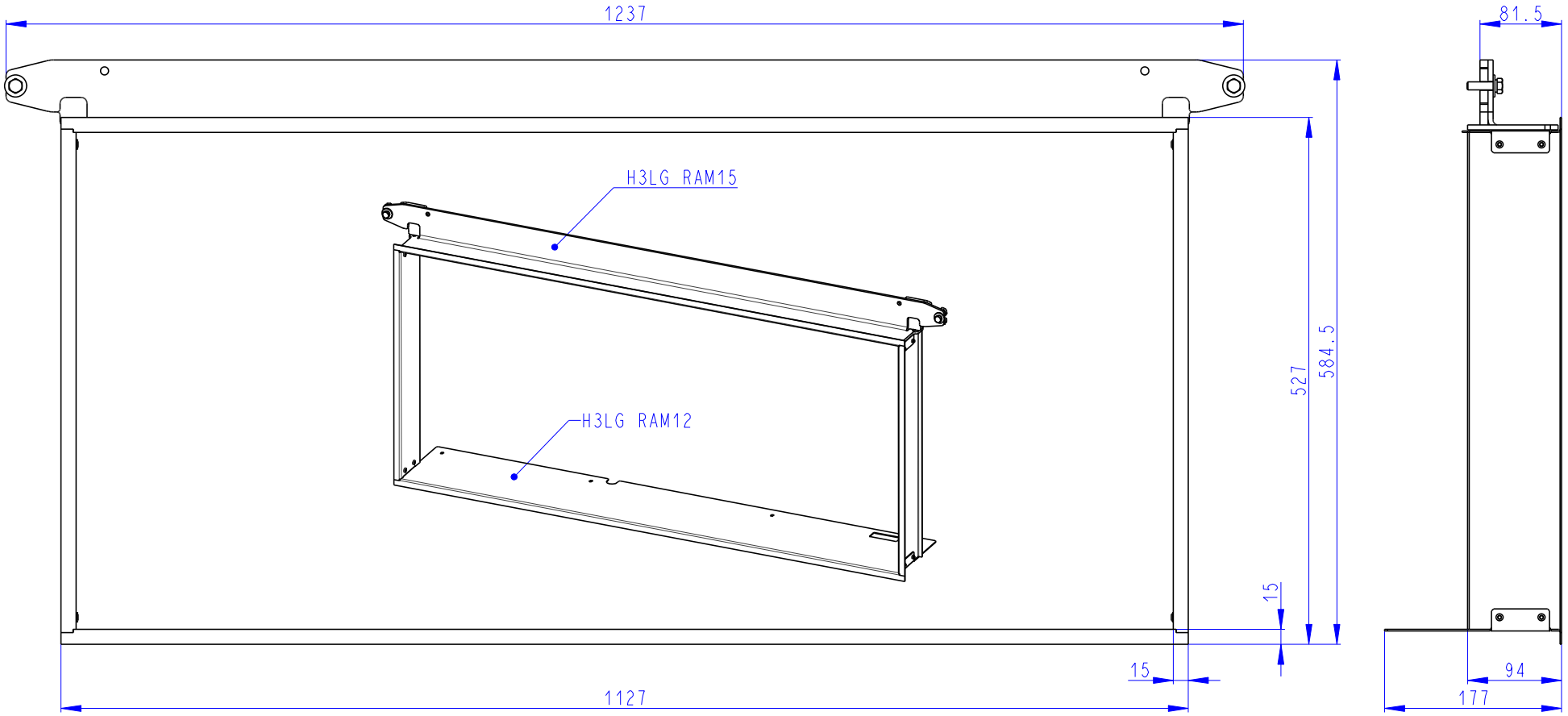

Rozmery v mm
Maße in mm
Dimensions in mm

H3LG RAM15
+H3LG RAM13

13kg

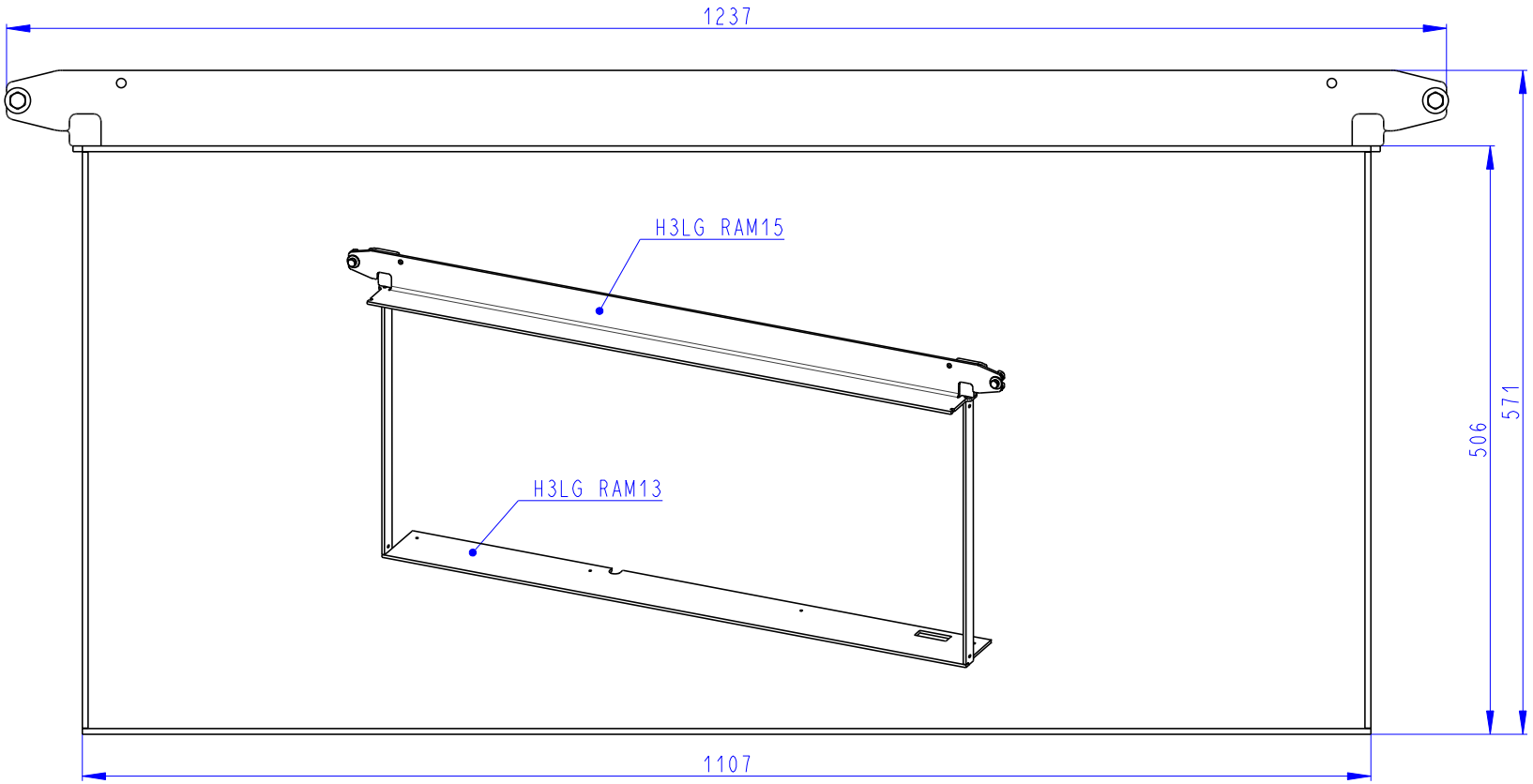

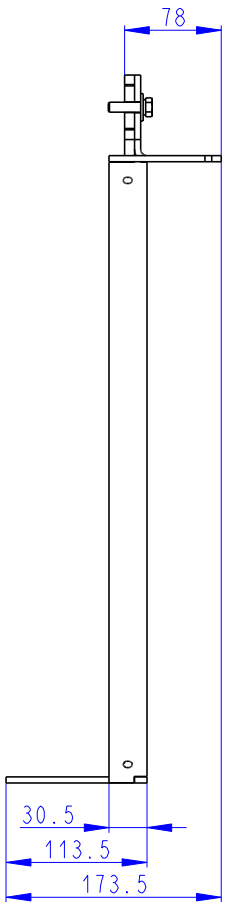

Rozmery v mm
Maße in mm
Dimensions in mm

H3LG RAM15
+H3LG RAM14

18kg

