Rozmery v mm
Maße in mm
Dimensions in mm

H3LJ RAM12

5kg

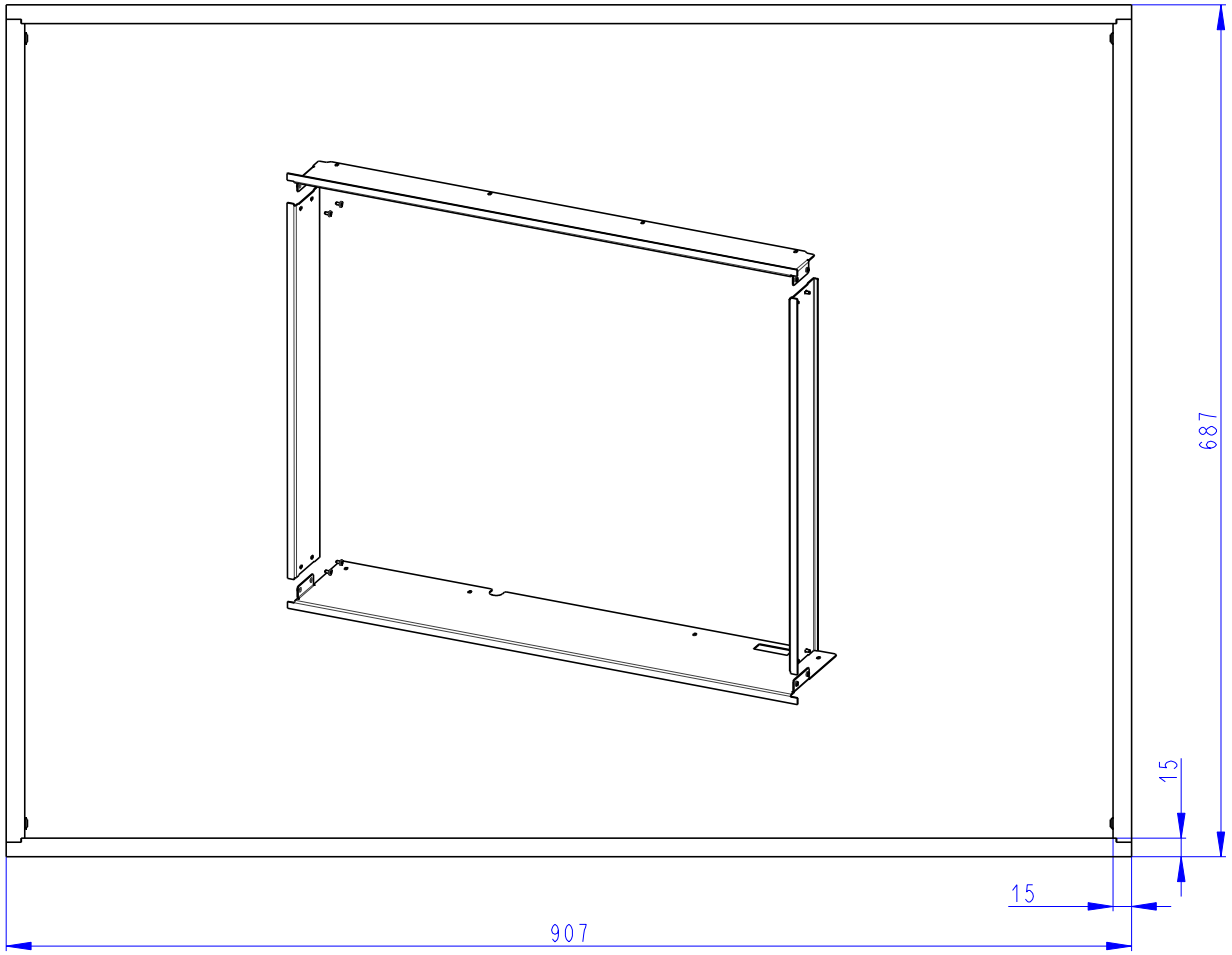

1:8

